J. Appl. Comput. Mech., 7(2) (2021) 715-726
DOI: 10.22055/JACM.2020.35571.2687

ISSN: 2383-4536
jacm.scu.ac.ir

Shahid Chamran University of Ahvaz

Journal of Applied and Computational Mechanics

Research Paper

An analytical Technique for Solving New Computational Solutions of the Modified Zakharov-Kuznetsov Equation Arising in Electrical Engineering

Shariful Islam[1], Md. Nur Alam[1], Md. Fayz-Al-Asad[2], Cemil Tunç[3]

[1] Department of Mathematics, Pabna University of Science and Technology, Pabna- 6600, Bangladesh
[2] Department of Civil Engineering, Dhaka International University, Dhaka-1212, Bangladesh
[3] Department of Mathematics, Faculty of Sciences, Van Yuzuncu Yil University, 65080, Van, Turkey

Received October 29 2020; Revised November 30 2020; Accepted for publication December 10 2020.
Corresponding author: Cemil Tunç (cemtunc@yahoo.com)

Abstract. The modified (G'/G)-expansion method is an efficient method that has appeared in recent times for solving new computational solutions of nonlinear partial differential equations (NPDEs) arising in electrical engineering. This research has applied this process to seek novel computational results of the developed Zakharov-Kuznetsov (ZK) equation in electrical engineering. With 3D and contour graphical illustration, mathematical results explicitly exhibit the proposed algorithm's complete honesty and high performance.

Keywords: The modified (G'/G)-expansion method, Nonlinear partial differential equations, Modified Zakharov-Kuznetsov equation, Computational solutions.

1. Introduction

NPDEs contain unknown multi-variable functions, and its derivatives have been considered fundamental in many applications to formulate precise linear and/or nonlinear phenomena from physics, mathematics, biology, engineering, and mechanical. (See, for instance, [1, 2, 3].). Studying and investigating the computational solutions of these models is considered one of many researchers' basic interests. According to these computational solutions, many mathematicians, engineers, physicians developed some methods and still trying to find new general methods to get computational solutions of these models, for example, the variation of (G'/G)-expansion method [4], the modified (G'/G)-expansion method [5, 6, 7, 8], extended Jacobian elliptic function expansion method [9], the Jacobi elliptic ansatz method [10], Natural transform method [11], Generalized Exp-Function method [12], Residual power series method [13], the unified method [14], Solitary wave ansatz method [15], Cubic B-spline scheme [16], the G′/G-expansion method [17, 18], modified Kudryashov method [19], the new auxiliary equation method [20], the hyperbolic and exponential ansatz method [21], the ansatz (positive quadratic and exponential functions) technique [22], modified variational iteration algorithm-II [23, 24, 25], Reproducing kernel method [26], fractional iteration algorithm [27, 28], new generalized (G'/G)-expansion method [29, 30], novel (G'/G)-expansion method [31, 32] and so many [33-35].

The goal of this letter is to give the modified (G'/G)-expansion method and the Hamiltonian system [36, 37] to find computational solutions for a discrete nonlinear transmission line equation [38-40]. The above model is also recognized through the modified ZK equation that aids in explaining the device of diverse aspects [41-43] as well as explain the evolution of weakly nonlinear ion-acoustic waves in a plasma consisting of hot isothermal electrons and cold ions in the presence of a uniform magnetic field in the x-direction. NPDEs have been studied as fundamental in various applications. This model has been applied to express multiple physical phenomena, natural, engineering and mechanical. That appears because it includes previously unknown multi-variable functions and its derivatives. For example, the electrical transmission lines, which are considered a good standard of systems for investigating nonlinear excitations, behave inside nonlinear media, as designated in Figure 1.

The nonlinear electrical transmission line is constructed based on periodically loading with var-actors or by arranging inductors and var-actors in a one-dimensional lattice. The nonlinear network with some couple nonlinear LC with a dispersive transmission line has consisted of this model. Many identical dispersive lines are coupled with capacitance C_s at each node, as represented in Figure 1, where a conductor L and a nonlinear capacitor of capacitance $C(V_{p,q})$ are in each line in the shunt branch. The scientific model which represents the discrete nonlinear transmission is given through the modified ZK equation that is expressed by Duan when he implemented the Kirchhoff law on the model, is provided by

Published online: December 12 2020

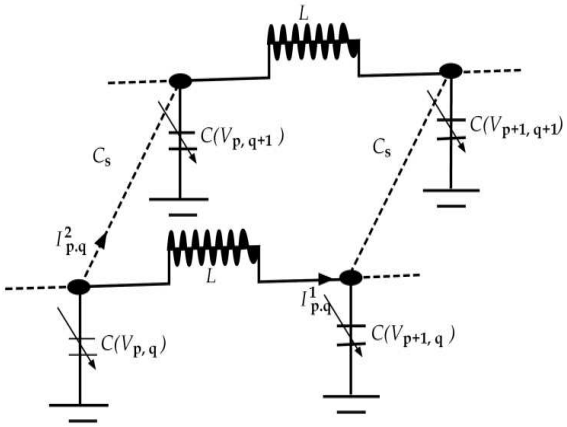

Fig. 1. Linear representation of the nonlinear electrical transmission line.

$$\frac{\partial^2 R_{p,q}}{\partial S^2} = \frac{1}{L}\left(V_{p+1,q} - 2V_{p,q} + V_{p-1,q}\right) + C_s \frac{\partial^2}{\partial S^2}\left(V_{p,q+1} - 2V_{p,q} + V_{p,q-1}\right), \tag{1}$$

where $V_{p,q} = V_{p,q}(S)$ is the voltage so that the nonlinear charge is determined as

$$R_{p,q} = C_0\left(V_{p,q} + \frac{\alpha_1}{2}V_{p,q}^2 + \frac{\alpha_2}{3}V_{p,q}^3\right) \tag{2}$$

where α_1, α_2 are arbitrary constants. Substituting equation (2) into equation (1), yields

$$C_0 \frac{\partial^2}{\partial S^2}\left(V_{p,q} + \frac{\alpha_1}{2}V_{p,q}^2 + \frac{\alpha_2}{3}V_{p,q}^3\right) = \frac{1}{L}\left(V_{p+1,q} - 2V_{p,q} + V_{p-1,q}\right) + C_s \frac{\partial^2}{\partial S^2}\left(V_{p,q+1} - 2V_{p,q} + V_{p,q-1}\right) \tag{3}$$

Replacing $V_{p,q}(S) = V(p,q,S)$, leads to

$$C_0 \frac{\partial^2}{\partial S^2}\left(V + \frac{\alpha_1}{2}V^2 + \frac{\alpha_2}{3}V^3\right) = \frac{1}{L}\frac{\partial^2}{\partial p^2}\left(V + \frac{1}{12}\frac{\partial^2}{\partial p^2}\right) + C_s \frac{\partial^4}{\partial S^2 \partial q^2}\left(V + \frac{1}{12}\frac{\partial^2}{\partial q^2}\right) \tag{4}$$

Based on the reductive perturbation technique, equation (4) is reduced to the following model:

$$\varphi_t + f_1\varphi\varphi_x + q\varphi^2\varphi_x + d\varphi_{xxx} + g\varphi_{xyy} = 0, \tag{5}$$

where

$$y = \sqrt{\gamma}q, x = \sqrt{\gamma}(p - v_s S), t = \sqrt{\gamma}S, V(p,q,S) = \gamma\varphi(x,y,t), v_s^2 = \frac{1}{LC_0}, f_1 = -\alpha_1 v_s, q = -\alpha_2 v_s, d = \frac{1}{24\alpha\alpha_1 L v_s}, g = \frac{\alpha_1}{288L^2 v_s C_0^2}.$$

Since x, y, t are independent transformation variables. Implementing the wave transformation $\varphi = \varphi(x,y,t) = \varphi(\eta)$, where $\eta = k_1 x + k_2 y + k_3 t$ and integrate the obtained ODE once with zero constant of integration, give

$$6k_3\varphi + 3f_1k_1\varphi^2 + 2qk_1\varphi^3 + 6k_1\left(dk_1^2 + gk_2^2\right)\varphi'' = 0. \tag{6}$$

Balancing the highest order derivative term and nonlinear terms, yields N = 1.

Section 2 shows the modified (G'/G)-expansion method. And the new computational solutions of the Zakharov-Kuznetsov equation in electrical engineering are expressed applying the studied method in Section 3. Section 4 presents the graphical representations of the obtained solutions. Finally, in Section 5, conclusion is described.

2. The methodology

We are considering the function

$$P(u, u_x, u_{xx}, u_t, u_{tt}, u_{xt}, \ldots) = 0, \tag{7}$$

where $u(x,t)$ is an unknown function and P is a polynomial in $u(x,t)$.

Step 1: Use the transformation:

$$u = u(x,t) = u(\eta), \eta = k(x - Vt + \eta_0), \tag{8}$$

where k and V are constants to be determined later and η_0 is an arbitrary constant. From equation (7) and equation (8), we have

$$R\left(u, ku', k^2u'', -kVu', k^2V^2u'', -k^2V^2u'', ...\right) = 0 \tag{9}$$

Step 2: Considering the anstaz method as the form,

$$u(\eta) = \sum_{i=-N}^{N} A_i H^i, \tag{10}$$

where $H = (G'/G + \lambda/2), |A_{-N}| + |A_N| \neq 0$ and $G = G(\eta)$ satisfies the equation

$$G'' + \lambda G' + \gamma G = 0, \tag{11}$$

where $A_i(\pm 1, \pm 2, ..., \pm N)$, λ and γ are coefficient constants later. Implementing homogeneous balance principle in equation (9), the positive integer N can be determined. From the equation (11), we find that

$$H' = r - H^2, \tag{12}$$

where $r = (\lambda^2 - 4\mu)/4$ and r is calculated by λ and μ . So, H satisfies the equation (12), which admits five types of solutions.

- If $r > 0$, then we find:

$$H = \sqrt{r}\tanh\left(\sqrt{r}\eta\right);$$

$$H = \sqrt{r}\coth\left(\sqrt{r}\eta\right);$$

- If $r = 0$, then we find:

$$H = \frac{1}{\eta};$$

- If $r < 0$, then we find:

$$H = -\sqrt{-r}\tan\left(\sqrt{-r}\eta\right);$$

$$H = \sqrt{-r}\cot\left(\sqrt{-r}\eta\right).$$

Step 3: By implementing equation (10) and (9) and equation (12) and collecting all terms with the same order of H together, the left-hand side of equation (9) is converted into polynomial in H. Equating each coefficient of the polynomial to zero, we can get a set of algebraic equations which can be solved to find the values of $A_i, i = \pm 1, \pm 2, ..., \pm N$, λ, μ. Finally, we can obtain the general solutions of equation (11) from A_i, λ, μ.

3. Formulation of the new computational solutions

Putting $N = 1$, then we have from (10):

$$u(\eta) = \sum_{i=-1}^{1} A_i H^i = A_{-1}H^{-1} + A_0 H^0 + A_1 H^1 \tag{13}$$

Using equation (13) into equation (6), collecting the coefficients of H and solving the resultant system, we find:

Stage 1:

$$A_{-1} = \frac{1}{4}\frac{f_1}{m}\left(\pm\sqrt{\lambda^2 - 4\mu}\right),\ A_0 = -\frac{1}{2}\frac{f_1}{m}, A_1 = 0,\ k_2 = \pm\sqrt{\frac{-\left(24k_1^2 f_2 \mu m - 6k_1^2 f_2 \lambda^2 m - f_1^2\right)}{\left(-6q\lambda^2 m + 24q\mu m\right)}},\ k_3 = \frac{1}{6}\frac{k_1 f_1^2}{m}.$$

Using the values of stage 1 into equation (13), then we have
For $r > 0$, then we find:

$$u_{11}(\eta)=\frac{\frac{1}{4}\frac{f_1}{m}\left(\pm\sqrt{\lambda^2-4\mu}\right)}{\frac{\sqrt{\lambda^2-4\mu}}{2}\tanh\left(\frac{\sqrt{\lambda^2-4\mu}}{2}\eta\right)}-\frac{1}{2}\frac{f_1}{m}. \tag{14}$$

$$u_{12}(\eta)=\frac{\frac{1}{4}\frac{f_1}{m}\left(\pm\sqrt{\lambda^2-4\mu}\right)}{\frac{\sqrt{\lambda^2-4\mu}}{2}\coth\left(\frac{\sqrt{\lambda^2-4\mu}}{2}\eta\right)}-\frac{1}{2}\frac{f_1}{m}. \tag{15}$$

For $r=0$, then we find:

$$u_{13}(\eta)=\frac{1}{4}\frac{f_1}{m}\eta-\frac{1}{2}\frac{f_1}{m}. \tag{16}$$

For $r<0$, then we find:

$$u_{14}(\eta)=\frac{\frac{1}{4}\frac{f_1}{m}\left(\pm\sqrt{\lambda^2-4\mu}\right)}{\frac{-\sqrt{-\lambda^2+4\mu}}{2}\tan\left(\frac{\sqrt{-\lambda^2+4\mu}}{2}\eta\right)}-\frac{1}{2}\frac{f_1}{m}. \tag{17}$$

$$u_{15}(\eta)=\frac{\frac{1}{4}\frac{f_1}{m}\left(\pm\sqrt{\lambda^2-4\mu}\right)}{\frac{\sqrt{-\lambda^2+4\mu}}{2}\cot\left(\frac{\sqrt{-\lambda^2+4\mu}}{2}\eta\right)}-\frac{1}{2}\frac{f_1}{m}. \tag{18}$$

In particular case, we choose the values of $\lambda=3,\mu=1,m=3,f_1=-1,f_2=1,k_1=2,q=1,\eta=k_1x+k_2y+k_3t$. Then, the equations (14) and (15) produce after putting the above values, we find:

$$u_{11}(x,y,t)=\frac{-\frac{1}{12}\left(\pm\sqrt{5}\right)}{\frac{\sqrt{5}}{2}\tanh\left[\frac{\sqrt{5}}{2}\left\{2x+\left(\pm\sqrt{\frac{361}{90}}\right)y+\frac{t}{9}\right\}\right]}.$$

$$u_{12}(x,y,t)=\frac{-\frac{1}{12}\left(\pm\sqrt{5}\right)}{\frac{\sqrt{5}}{2}\coth\left[\frac{\sqrt{5}}{2}\left\{2x+\left(\pm\sqrt{\frac{361}{90}}\right)y+\frac{t}{9}\right\}\right]}.$$

If $\lambda=3,\mu=1,m=3,f_1=-1,f_2=1,k_1=2,q=1,\eta=k_1x+k_2y+k_3t$. Then, the equation (16) produces after putting the above values:

$$u_{13}(x,y,t)=-\frac{1}{12}\left[2x+\left\{\pm\sqrt{\frac{361}{90}}\right\}y+\frac{t}{9}\right]+\frac{1}{6}.$$

If $\lambda=3,\mu=1,m=3,f_1=-1,f_2=1,k_1=2,q=1,\eta=k_1x+k_2y+k_3t$. Then, the equations (17) and (18) produce after putting the above values:

$$u_{14}(x,y,t)=\frac{-\frac{1}{12}\left(\pm\sqrt{-3}\right)}{\frac{-\sqrt{3}}{2}\tan\left[\frac{\sqrt{3}}{2}\left\{2x+\left(\pm\sqrt{\frac{361}{90}}\right)y+\frac{t}{9}\right\}\right]}+\frac{1}{6}.$$

$$u_{15}(x,y,t)=\frac{-\frac{1}{12}\left(\pm\sqrt{-3}\right)}{\frac{\sqrt{3}}{2}\cot\left[\frac{\sqrt{3}}{2}\left\{2x+\left(\pm\sqrt{\frac{361}{90}}\right)y+\frac{t}{9}\right\}\right]}+\frac{1}{6}.$$

Stage 2:

$$A_1=\frac{f_1}{m}\left(\pm\sqrt{\frac{-1}{(-\lambda^2+4\mu)}}\right),\ A_0=-\frac{1}{2}\frac{f_1}{m},A_{-1}=0,\ k_2=\pm\sqrt{\frac{-\left(24k_1^2f_2\mu m-6k_1^2f_2\lambda^2m-f_1^2\right)}{(-6q\lambda^2m+24q\mu m)}},\ k_3=\frac{1}{6}\frac{k_1f_1^2}{m}.$$

Using the values of stage 2 into equation (13), then we have

For $r>0$, then we find:

$$u_{21}(\eta)=-\frac{1}{2}\frac{f_1}{m}+\left[\frac{f_1}{m}\left(\pm\sqrt{\frac{-1}{(-\lambda^2+4\mu)}}\right)\left\{\frac{\sqrt{\lambda^2-4\mu}}{2}\tanh\left(\frac{\sqrt{\lambda^2-4\mu}}{2}\eta\right)\right\}\right]. \tag{19}$$

$$u_{22}(\eta)=-\frac{1}{2}\frac{f_1}{m}+\left[\frac{f_1}{m}\left(\pm\sqrt{\frac{-1}{(-\lambda^2+4\mu)}}\right)\left\{\frac{\sqrt{\lambda^2-4\mu}}{2}\coth\left(\frac{\sqrt{\lambda^2-4\mu}}{2}\eta\right)\right\}\right]. \tag{20}$$

For $r=0$, then we find:

$$u_{23}(\eta)=-\frac{1}{2}\frac{f_1}{m}+\left\{\frac{f_1}{m}\left(\pm\sqrt{\frac{-1}{(-\lambda^2+4\mu)}}.\left(\frac{1}{\eta}\right)\right)\right\}. \tag{21}$$

For $r<0$, then we find:

$$u_{24}(\eta)=-\frac{1}{2}\frac{f_1}{m}+\left[\frac{f_1}{m}\left(\pm\sqrt{\frac{-1}{(-\lambda^2+4\mu)}}\right)\left\{\frac{-\sqrt{-\lambda^2+4\mu}}{2}\tan\left(\frac{\sqrt{-\lambda^2+4\mu}}{2}\eta\right)\right\}\right]. \tag{22}$$

$$u_{25}(\eta)=-\frac{1}{2}\frac{f_1}{m}+\left[\frac{f_1}{m}\left(\pm\sqrt{\frac{-1}{(-\lambda^2+4\mu)}}\right)\left\{\frac{\sqrt{-\lambda^2+4\mu}}{2}\cot\left(\frac{\sqrt{-\lambda^2+4\mu}}{2}\eta\right)\right\}\right]. \tag{23}$$

In particular case, we choose the values of $\lambda=3,\mu=1,m=3,f_1=-1,f_2=1,k_1=2,q=1,\eta=k_1x+k_2y+k_3t$. Then the equations (19) and (20) produce after putting the values, we get:

$$u_{21}(x,y,t)=\frac{1}{6}+\left[-\frac{1}{3}\left(\pm\sqrt{\frac{1}{5}}\right)\left\{\frac{\sqrt{5}}{2}\tanh\left(\frac{\sqrt{5}}{2}\left(2x+\left(\pm\sqrt{\frac{361}{-90}}\right)y+\frac{t}{9}\right)\right)\right\}\right].$$

$$u_{22}(x,y,t)=\frac{1}{6}+\left[-\frac{1}{3}\left(\pm\sqrt{\frac{1}{5}}\right)\left\{\frac{\sqrt{5}}{2}\coth\left(\frac{\sqrt{5}}{2}\left(2x+\left(\pm\sqrt{\frac{361}{-90}}\right)y+\frac{t}{9}\right)\right)\right\}\right].$$

If $\lambda=3,\mu=1,m=3,f_1=-1,f_2=1,k_1=2,q=1,\eta=k_1x+k_2y+k_3t$. Then the equations (22) and (23) produce after putting the values, we get:

$$u_{24}(x,y,t)=\frac{1}{6}+\left[-\frac{1}{3}\left(\pm\sqrt{\frac{-1}{3}}\right)\left\{\frac{-\sqrt{3}}{2}\tan\left(\frac{\sqrt{3}}{2}\left(2x+\left(\pm\sqrt{\frac{361}{-90}}\right)y+\frac{t}{9}\right)\right)\right\}\right].$$

$$u_{25}(x,y,t)=\frac{1}{6}+\left[-\frac{1}{3}\left(\pm\sqrt{\frac{-1}{3}}\right)\left\{\frac{\sqrt{3}}{2}\cot\left(\frac{\sqrt{3}}{2}\left(2x+\left(\pm\sqrt{\frac{361}{-90}}\right)y+\frac{t}{9}\right)\right)\right\}\right].$$

Stage 3:

$$A_{-1}=\frac{1}{8}\frac{f_1}{m}\left(\frac{1}{\pm\sqrt{\frac{1}{(-2\lambda^2+8\mu)}}},\right)A_0=-\frac{1}{2}\frac{f_1}{m},A_1=\frac{f_1}{m}\left(\pm\sqrt{\frac{1}{(-2\lambda^2+8\mu)}}\right),k_2=\pm\sqrt{\frac{-\left(48k_1^2f_2\mu m+f_1^2-12k_1^2f_2\lambda^2m\right)}{(-12q\lambda^2m+48q\mu m)}},\ k_3=\frac{1}{6}\frac{k_1f_1^2}{m}.$$

Using the values of stage 3 into equation (13), then we have:
For $r>0$, then we find:

$$u_{31}(\eta)=\frac{\frac{1}{8}\frac{f_1}{m}\left(\frac{1}{\pm\sqrt{\frac{1}{(-2\lambda^2+8\mu)}}}\right)}{\frac{\sqrt{\lambda^2-4\mu}}{2}\tanh\left(\frac{\sqrt{\lambda^2-4\mu}}{2}\eta\right)}-\frac{1}{2}\frac{f_1}{m}+\frac{f_1}{m}\left(\pm\sqrt{\frac{1}{(-2\lambda^2+8\mu)}}\right)\left\{\frac{\sqrt{\lambda^2-4\mu}}{2}\tanh\left(\frac{\sqrt{\lambda^2-4\mu}}{2}\eta\right)\right\}. \tag{24}$$

$$u_{32}(\eta)=\frac{\frac{1}{8}\frac{f_1}{m}\left(\frac{1}{\pm\sqrt{\frac{1}{(-2\lambda^2+8\mu)}}}\right)}{\frac{\sqrt{\lambda^2-4\mu}}{2}\coth\left(\frac{\sqrt{\lambda^2-4\mu}}{2}\eta\right)}-\frac{1}{2}\frac{f_1}{m}+\frac{f_1}{m}\left(\pm\sqrt{\frac{1}{(-2\lambda^2+8\mu)}}\right)\left\{\frac{\sqrt{\lambda^2-4\mu}}{2}\coth\left(\frac{\sqrt{\lambda^2-4\mu}}{2}\eta\right)\right\}. \tag{25}$$

For $r=0$, then we find:

$$u_{33}(\eta)=\frac{1}{8}\frac{f_1}{m}\left(\frac{1}{\pm\sqrt{\frac{1}{(-2\lambda^2+8\mu)}}}\right)\eta-\frac{1}{2}\frac{f_1}{m}+\frac{f_1}{m}\left(\pm\sqrt{\frac{1}{(-2\lambda^2+8\mu)}}\right)\frac{1}{\eta}. \tag{26}$$

For $r<0$, then we find:

$$u_{34}(\eta)=\frac{\frac{1}{8}\frac{f_1}{m}\left(\frac{1}{\pm\sqrt{\frac{1}{(-2\lambda^2+8\mu)}}}\right)}{\frac{-\sqrt{-\lambda^2+4\mu}}{2}\tan\left(\frac{\sqrt{-\lambda^2+4\mu}}{2}\eta\right)}-\frac{1}{2}\frac{f_1}{m}+\frac{f_1}{m}\left(\pm\sqrt{\frac{1}{(-2\lambda^2+8\mu)}}\right)\left\{\frac{-\sqrt{-\lambda^2+4\mu}}{2}\tan\left(\frac{\sqrt{-\lambda^2+4\mu}}{2}\eta\right)\right\}. \tag{27}$$

$$u_{35}(\eta)=\frac{\frac{1}{8}\frac{f_1}{m}\left(\frac{1}{\pm\sqrt{\frac{1}{(-2\lambda^2+8\mu)}}}\right)}{\frac{\sqrt{-\lambda^2+4\mu}}{2}\cot\left(\frac{\sqrt{-\lambda^2+4\mu}}{2}\eta\right)}-\frac{1}{2}\frac{f_1}{m}+\frac{f_1}{m}\left(\pm\sqrt{\frac{1}{(-2\lambda^2+8\mu)}}\right)\left\{\frac{\sqrt{-\lambda^2+4\mu}}{2}\cot\left(\frac{\sqrt{-\lambda^2+4\mu}}{2}\eta\right)\right\}. \tag{28}$$

In particular case, we choose the values of $\lambda=3,\mu=1,m=3,f_1=-1,f_2=1,k_1=2,q=1,\eta=k_1x+k_2y+k_3t$. Then the equations (24) and (25) produce after putting the values we get

$$u_{31}(x,y,t)=\frac{-\frac{1}{24}\left(\frac{1}{\pm\sqrt{\frac{1}{-10}}}\right)}{\frac{\sqrt{5}}{2}\tanh\left[\frac{\sqrt{5}}{2}\left\{2x+\left(\pm\sqrt{\frac{719}{-180}}\right)y+\frac{t}{9}\right\}\right]}+\frac{1}{6}-\frac{1}{3}\left[\left(\pm\sqrt{\frac{1}{-10}}\right)\left\{\frac{\sqrt{5}}{2}\tanh\left(\frac{\sqrt{5}}{2}\left(2x+\left(\pm\sqrt{\frac{719}{-180}}\right)y+\frac{t}{9}\right)\right)\right\}\right].$$

$$u_{32}(x,y,t)=\frac{-\frac{1}{24}\left(\frac{1}{\pm\sqrt{\frac{1}{-10}}}\right)}{\frac{\sqrt{5}}{2}\coth\left[\frac{\sqrt{5}}{2}\left\{2x+\left(\pm\sqrt{\frac{719}{-180}}\right)y+\frac{t}{9}\right\}\right]}+\frac{1}{6}-\frac{1}{3}\left[\left(\pm\sqrt{\frac{1}{-10}}\right)\left\{\frac{\sqrt{5}}{2}\coth\left(\frac{\sqrt{5}}{2}\left(2x+\left(\pm\sqrt{\frac{719}{-180}}\right)y+\frac{t}{9}\right)\right)\right\}\right].$$

If $\lambda=3,\mu=1,m=3,f_1=-1,f_2=1,k_1=2,q=1,\eta=k_1x+k_2y+k_3t$. Then the equations (27) and (28) produce after putting the values we get:

$$u_{34}(x,y,t)=\frac{-\frac{1}{24}\left(\frac{1}{\pm\sqrt{\frac{1}{6}}}\right)}{\frac{-\sqrt{3}}{2}\tan\left[\frac{\sqrt{3}}{2}\left\{2x+\left(\pm\sqrt{\frac{-433}{108}}\right)y+\frac{t}{9}\right\}\right]}+\frac{1}{6}-\frac{1}{3}\left[\left(\pm\sqrt{\frac{1}{6}}\right)\left\{\frac{-\sqrt{3}}{2}\tan\left(\frac{\sqrt{3}}{2}\left(2x+\left(\pm\sqrt{\frac{-433}{108}}\right)y+\frac{t}{9}\right)\right)\right\}\right].$$

$$u_{35}(x,y,t)=\frac{-\frac{1}{24}\left(\frac{1}{\pm\sqrt{\frac{1}{6}}}\right)}{\frac{\sqrt{3}}{2}\cot\left[\frac{\sqrt{3}}{2}\left\{2x+\left(\pm\sqrt{\frac{-433}{108}}\right)y+\frac{t}{9}\right\}\right]}+\frac{1}{6}-\frac{1}{3}\left[\left(\pm\sqrt{\frac{1}{6}}\right)\left\{\frac{\sqrt{3}}{2}\cot\left(\frac{\sqrt{3}}{2}\left(2x+\left(\pm\sqrt{\frac{-433}{108}}\right)y+\frac{t}{9}\right)\right)\right\}\right].$$

Stage 4:

$$A_{-1}=\frac{1}{16}\frac{f_1}{m}\left(\frac{1}{\pm\sqrt{\frac{-1}{(-4\lambda^2+16\mu)}}}\right)A_0=-\frac{1}{2}\frac{f_1}{m},A_1=\frac{f_1}{m}\left(\pm\sqrt{\frac{-1}{(-4\lambda^2+16\mu)}}\right),k_2=\pm\sqrt{\frac{-(96k_1^2f_2\mu m-f_1^2-24k_1^2f_2\lambda^2m)}{96q\mu m-24q\lambda^2m}},k_3=\frac{1}{6}\frac{k_1f_1^2}{m}.$$

Using the values of stage 4 into equation (13), then we have
For $r>0$, then we find:

$$u_{41}(\eta)=\frac{\frac{1}{16}\frac{f_1}{m}\left(\frac{1}{\pm\sqrt{\frac{-1}{(-4\lambda^2+16\mu)}}}\right)}{\frac{\sqrt{\lambda^2-4\mu}}{2}\tanh\left(\frac{\sqrt{\lambda^2-4\mu}}{2}\eta\right)}-\frac{1}{2}\frac{f_1}{m}+\frac{f_1}{m}\left(\pm\sqrt{\frac{-1}{(-4\lambda^2+16\mu)}}\right)\left\{\frac{\sqrt{\lambda^2-4\mu}}{2}\tanh\left(\frac{\sqrt{\lambda^2-4\mu}}{2}\eta\right)\right\}. \tag{29}$$

$$u_{42}(\eta)=\frac{\frac{1}{16}\frac{f_1}{m}\left(\frac{1}{\pm\sqrt{\frac{-1}{(-4\lambda^2+16\mu)}}}\right)}{\frac{\sqrt{\lambda^2-4\mu}}{2}\coth\left(\frac{\sqrt{\lambda^2-4\mu}}{2}\eta\right)}-\frac{1}{2}\frac{f_1}{m}+\frac{f_1}{m}\left(\pm\sqrt{\frac{-1}{(-4\lambda^2+16\mu)}}\right)\left\{\frac{\sqrt{\lambda^2-4\mu}}{2}\coth\left(\frac{\sqrt{\lambda^2-4\mu}}{2}\eta\right)\right\}. \tag{30}$$

For $r=0$, then we find:

$$u_{43}(\eta)=\frac{1}{16}\frac{f_1}{m}\left(\frac{1}{\pm\sqrt{\frac{-1}{(-4\lambda^2+16\mu)}}}\right)\eta-\frac{1}{2}\frac{f_1}{m}+\frac{f_1}{m}\left(\pm\sqrt{\frac{-1}{(-4\lambda^2+16\mu)}}\right)\left(\frac{1}{\eta}\right). \tag{31}$$

For $r<0$, then we find:

$$u_{44}(\eta)=\frac{\frac{1}{16}\frac{f_1}{m}\left(\frac{1}{\pm\sqrt{\frac{-1}{(-4\lambda^2+16\mu)}}}\right)}{\frac{-\sqrt{-\lambda^2+4\mu}}{2}\tan\left(\frac{\sqrt{-\lambda^2+4\mu}}{2}\eta\right)}-\frac{1}{2}\frac{f_1}{m}+\frac{f_1}{m}\left(\pm\sqrt{\frac{-1}{(-4\lambda^2+16\mu)}}\right)\left\{\frac{-\sqrt{-\lambda^2+4\mu}}{2}\tan\left(\frac{\sqrt{-\lambda^2+4\mu}}{2}\eta\right)\right\}. \tag{32}$$

$$u_{45}(\eta)=\frac{\frac{1}{16}\frac{f_1}{m}\left(\frac{1}{\pm\sqrt{\frac{-1}{(-4\lambda^2+16\mu)}}}\right)}{\frac{\sqrt{-\lambda^2+4\mu}}{2}\cot\left(\frac{\sqrt{-\lambda^2+4\mu}}{2}\eta\right)}-\frac{1}{2}\frac{f_1}{m}+\frac{f_1}{m}\left(\pm\sqrt{\frac{-1}{(-4\lambda^2+16\mu)}}\right)\left\{\frac{\sqrt{-\lambda^2+4\mu}}{2}\cot\left(\frac{\sqrt{-\lambda^2+4\mu}}{2}\eta\right)\right\}. \tag{33}$$

In particular case, we choose the values of $\lambda=3,\mu=1,m=3,f_1=-1,f_2=1,k_1=2,q=1,\eta=k_1x+k_2y+k_3t$. Then the equations (29) and (30) produce after putting the values we get:

$$u_{41}(x,y,t)=\frac{-\frac{1}{48}\left(\frac{1}{\pm\sqrt{\frac{1}{20}}}\right)}{\frac{\sqrt{5}}{2}\tanh\left[\frac{\sqrt{5}}{2}\left\{2x+\left(\pm\sqrt{\frac{1441}{-360}}\right)y+\frac{t}{9}\right\}\right]}+\frac{1}{6}-\frac{1}{3}\left[\left(\pm\sqrt{\frac{1}{20}}\right)\left\{\frac{\sqrt{5}}{2}\tanh\left(\frac{\sqrt{5}}{2}\left(2x+\left(\pm\sqrt{\frac{1441}{-360}}\right)y+\frac{t}{9}\right)\right)\right\}\right].$$

$$u_{42}(x,y,t)=\frac{-\frac{1}{48}\left(\frac{1}{\pm\sqrt{\frac{1}{20}}}\right)}{\frac{\sqrt{5}}{2}\coth\left[\frac{\sqrt{5}}{2}\left\{2x+\left(\pm\sqrt{\frac{1441}{-360}}\right)y+\frac{t}{9}\right\}\right]}+\frac{1}{6}-\frac{1}{3}\left[\left(\pm\sqrt{\frac{1}{20}}\right)\left\{\frac{\sqrt{5}}{2}\coth\left(\frac{\sqrt{5}}{2}\left(2x+\left(\pm\sqrt{\frac{(1441)}{-360}}\right)y+\frac{t}{9}\right)\right)\right\}\right].$$

If $\lambda=3,\mu=1,m=3,f_1=-1,f_2=1,k_1=2,q=1,\eta=k_1x+k_2y+k_3t$. Then the equations (32) and (33) produce after putting the values we get:

$$u_{44}(x,y,t)=\frac{-\frac{1}{48}\left(\frac{1}{\pm\sqrt{\frac{-1}{12}}}\right)}{\frac{-\sqrt{3}}{2}\tan\left[\frac{\sqrt{3}}{2}\left\{2x+\left(\pm\sqrt{\frac{1441}{-360}}\right)y+\frac{t}{9}\right\}\right]}+\frac{1}{6}-\frac{1}{3}\left[\left(\pm\sqrt{\frac{-1}{12}}\right)\left\{\frac{-\sqrt{3}}{2}\tan\left(\frac{\sqrt{3}}{2}\left(2x+\left(\pm\sqrt{\frac{1441}{-360}}\right)y+\frac{t}{9}\right)\right)\right\}\right].$$

$$u_{45}(x,y,t)=\frac{-\frac{1}{48}\left(\frac{1}{\pm\sqrt{\frac{-1}{12}}}\right)}{\frac{\sqrt{3}}{2}\cot\left[\frac{\sqrt{3}}{2}\left\{2x+\left(\pm\sqrt{\frac{1441}{-360}}\right)y+\frac{t}{9}\right\}\right]}+\frac{1}{6}-\frac{1}{3}\left[\left(\pm\sqrt{\frac{-1}{12}}\right)\left\{\frac{\sqrt{3}}{2}\cot\left(\frac{\sqrt{3}}{2}\left(2x+\left(\pm\sqrt{\frac{1441}{-360}}\right)y+\frac{t}{9}\right)\right)\right\}\right].$$

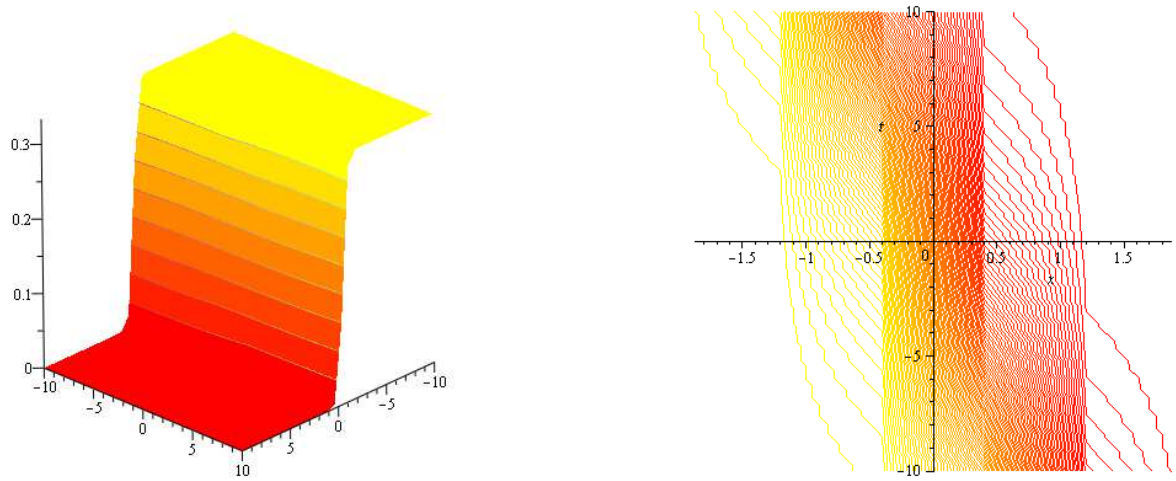

Fig. 2. Solitary wave of $u_{12}(x,y,t)$ in 3D and contour plots.

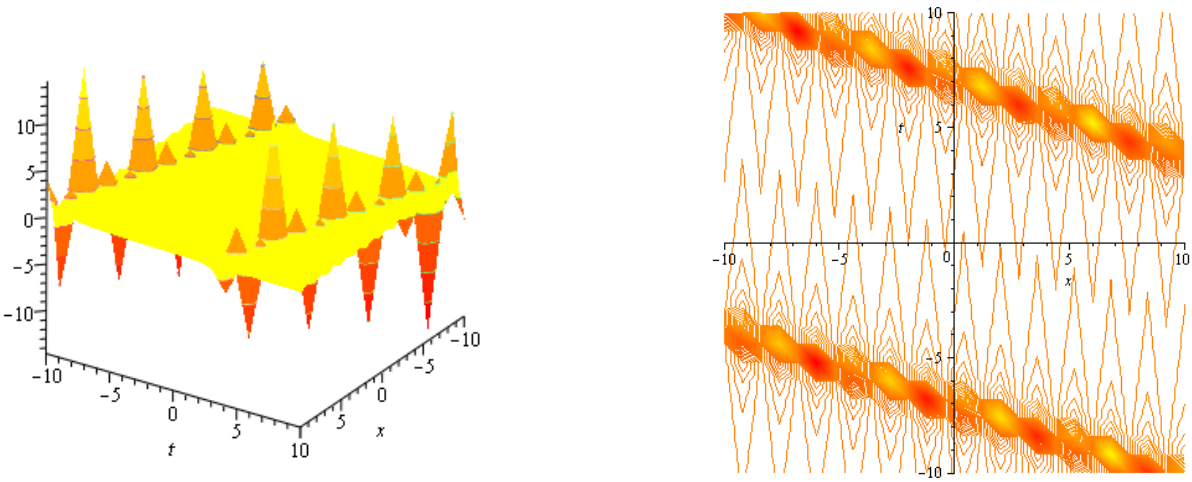

Fig. 3. Solitary wave of $u_{14}(x,y,t)$ in 3D and contour plots.

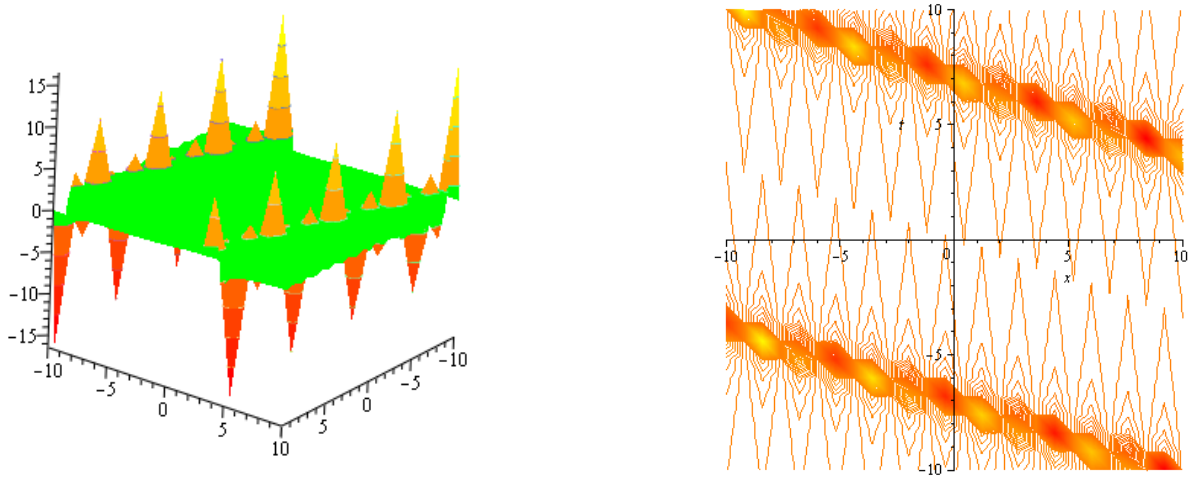

Fig. 4. Solitary wave of $u_{15}(x,y,t)$ in 3D and contour plots.

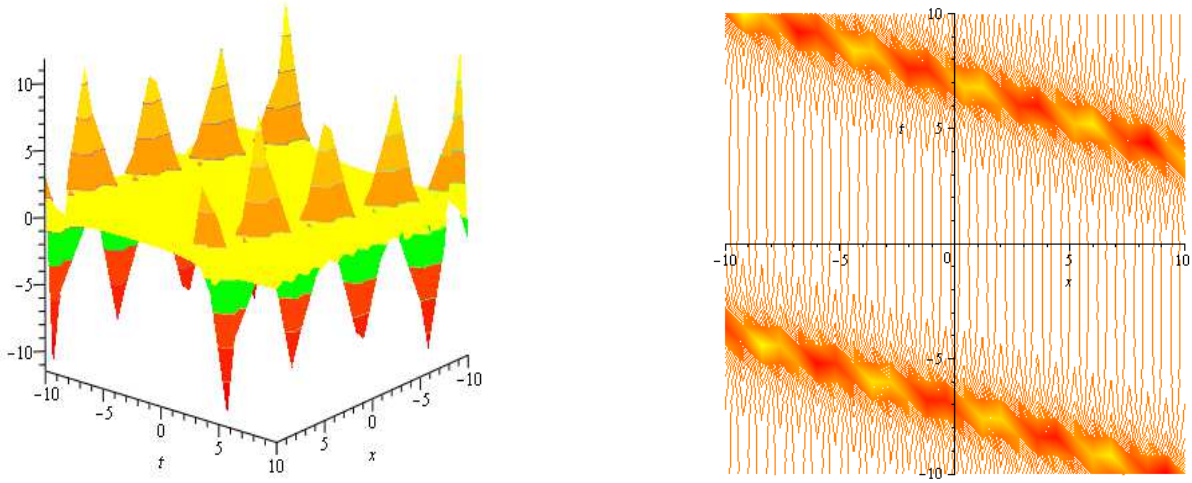

Fig. 5. Solitary wave of $u_{35}(x,y,t)$ in 3D and contour plots.

4. Graphical representations and discussion

In this part, we establish some new computational solutions such as hyperbolic, trigonometric and rational solutions through the modified (G'/G)-expansion method. After implementing the proposed way, we got twenty new computational solutions which are representation kink-type shape and different type of periodic wave shape. To the skilled of our knowledge, implementing the modified (G'/G)-expansion method to the studied equation has not been published earlier. Some of our obtained computational

solutions are represented in the following figures 2, 3, 4, 5 and 6. These figures describe 3D as well as contour shapes. Moreover, their mechanical descriptions of the results are incorporated. Figures 2–6 illustrate the graphical depictions of some selected computational results of the problem received utilizing the studied scheme. They are pictured below. In Figure 2 shows the three-dimensional shape and contour shape of the solution $u_{12}(x,y,t)$ represented as the kink-type wave shape. Finally, we show the three-dimensional shape and contour shape of the solutions of $u_{14}(x,y,t)$, $u_{15}(x,y,t)$, $u_{35}(x,y,t)$ and $u_{44}(x,y,t)$ are plotted in Figures 3, 4, 5 and 6 represented as the different type of periodic wave shapes.

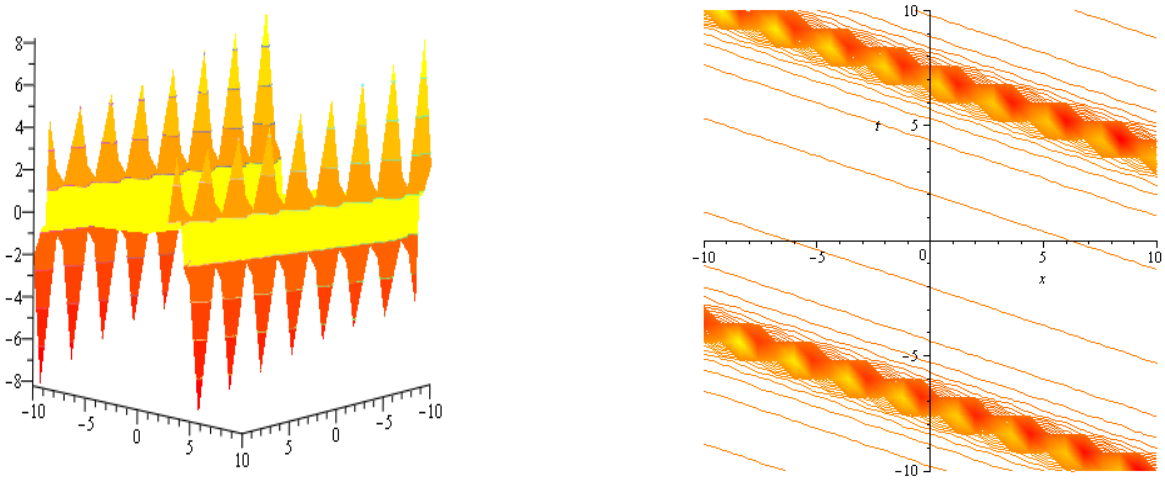

Fig. 6. Solitary wave of $u_{44}(x,y,t)$ in 3D and contour plots.

5. Conclusion

This article successfully implemented the modified expansion method on the modified ZK equation to display more physical energy-transportation properties in nonlinear electrical transmission lines. Using the studied method, we get many new computational solutions such as complex, rational, hyperbolic and trigonometric function solutions. Here, we try to see that the nonlinear electrical transmission line is constructed based on periodically loading with var-actors or by arranging inductors and var-actors in a one-dimensional lattice. Some sketches were plotted to illustrate the more physical properties of these models. The principal advantage of the technique implemented in this study over the basic (G'/G)-expansion scheme provides further new computational solutions, including additional free parameters. All the answers obtained by the basic (G'/G)-expansion process are taken via the applied approach as a particular case, and we receive some new solutions as well. The computational answers have vast significance in uncovering the inner device of physical aspects. Apart from the physical relevance, the computational solutions of nonlinear evolution equations help the numerical solvers compare their results' accuracy and help them in the stability analysis. In the basic (G'/G)-expansion method, if the order of the reduced ordinary differential equation (ODE) is less than or equal to three, it is mostly possible to find out with the help of computer algebra a useful solution to the algebraic equations resulted. Otherwise, it is generally unable to guarantee an explanation of the resulted algebraic equations; this is because the number of the equations included in the set of algebraic equations is generally more significant than the number of unknowns. But the implemented approach might be utilized less than or equal to fourth-order reduced ODE since it includes other arbitrary constants compared to the basic (G'/G)-expansion method. To the most beneficial of the author's understanding, the answers received in this study essentially have not been described in the literature. The recommended method's advantages are uncomplicated, outspoken, consistent, and minimizing the computational work size, which gives its wide-range applicability. With all these properties, our studied way is effectiveness and influence and its strength to implement other nonlinear partial differential equations arising engineering and deserves future research.

Author Contributions

S. Islam: Conceptualization, investigation and methodology. Md. N. Alam: project administration, methodology, developed the mathematical modeling and examined the theory validation and writing—the original draft, review, and editing. Md. Fayz-Al-Asad: investigation and the experiments and analyzed the empirical results. C. Tunç: project administration, review and editing. All authors read and agreed to the published version of the manuscript.

Acknowledgments

The authors acknowledge and salute the JACM editorial board management, and thank the consequent anonymous referees' diligent efforts and critiques that helped improve the flow, style and scientific veracity of this paper.

Conflict of Interest

The authors declared no potential conflicts of interest with respect to the research, authorship, and publication of this article.

Funding

The authors received no financial support for the research, authorship, and publication of this article.

References

[1] Li, T., Pintus, N., Viglialoro, G., Properties of solutions to porous medium problems with different sources and boundary conditions, *Zeitschrift für Angewandte Mathematik und Physik*, 70, 2019, 1-18.
[2] Viglialoro, G., Murcia, J., A singular elliptic problem related to the membrane equilibrium equations, *International Journal of Computer Mathematics*, 90, 2013, 2185-2196.
[3] Li, T., Viglialoro, G., Analysis and explicit solvability of degenerate tensorial problems, *Boundary Value Problems*, 2018, 2018, 1-13.
[4] Alam, M.N., Seadawy, A.R., Baleanu, D., Closed-form wave structures of the space-time fractional Hirota–Satsuma coupled KdV equation with nonlinear physical phenomena, *Open Physics*, 18(1), 2020, 555-565.
[5] Alam, M.N., Seadawy, A.R., Baleanu, D., Closed-form solutions to the solitary wave equation in an unmagnatized dusty plasma, *Alexandria Engineering Journal*, 59(3), 2020, 1505-1514.
[6] Alam, M.N., Aktar , S., Tunc, C., New solitary wave structures to time fractional biological population model, *Journal of Mathematical Analysis*, 11(3), 2020, 59-70.
[7] Alam, M.N., Tunc, C., The new solitary wave structures for the (2 + 1)-dimensional time-fractional Schrodinger equation and the space-time nonlinear conformable fractional Bogoyavlenskii equations, *Alexandria Engineering Journal*, 59(4), 2020, 2221-2232.
[8] Alam, M.N., Li, X., New soliton solutions to the nonlinear complex fractional Schrödinger equation and the conformable time-fractional Klein–Gordon equation with quadratic and cubic nonlinearity, *Physica Scripta*, 95, 2020, 045224.
[9] Abdelrahman, M.A.E., Khater, M.M.A., Traveling wave solutions for the couple Boiti–Leon–Pempinelli system by using extended Jacobian elliptic function expansion method, *Journal of Advances in Physics*, 11(3), 2015, 3134-3138.
[10] Aslan, E.C., Inc, M., Optical soliton solutions of the NLSE with quadratic-cubic-hamiltonian perturbations and modulation instability analysis, *Optik*, 196, 2019, 162661.
[11] Ismail, G.M., Rahim, H.R.A., Aty, A.A., Kharabsheh, Alharbi, W., Aty, M.A., An analytical solution for fractional oscillator in a resisting medium, *Chaos, Solitons and Fractals*, 130, 2020, 109395.
[12] Khater, M.M.A., Seadawy, A.R., Lu, D., Dispersive solitary wave solutions of new coupled Konno-Oono, Higgs field and Maccari equations and their applications, *Journal of King Saud University – Science*, 30(3), 2018, 417–423.
[13] Korpinar, Z., Inc, M., Numerical simulations for fractional variation of (1+ 1)-dimensional Biswas-Milovicequation, *Optik*, 166, 2018, 77–85.
[14] Osman, M.S., Rezazadeh, H., Eslami, M., Traveling wave solutions for (3+1) dimensional conformable fractional Zakharov-Kuznetsov equation with power law nonlinearity, *Nonlinear Engineering*, 8, 2019, 559–567.
[15] Lu, D., Tariq, K.U., Osman, M.S., Baleanu, D., Younis, M., Khater, M.M.A., New analytical wave structures for the (3 + 1)-dimensional Kadomtsev-Petviashvili and the generalized Boussinesq models and their applications, *Results in Physics*, 14, 2019, 102491.
[16] Lu, D., Osman, M.S., Khater, M.M.A., Attia, R.A.M., Baleanu, D., Analytical and numerical simulations for the kinetics of phase separation in iron (Fe–Cr–X (X=Mo, Cu)) based on ternary alloys, *Physica A: Statistical Mechanics and its Applications*, 537, 2020, 122634.
[17] Liu, J.G., Osman, M.S., Wazwaz, A.M., A variety of nonautonomous complex wave solutions for the (2+1)-dimensional nonlinear Schrödinger equation with variable coefficients in nonlinear optical fibers, *Optik*, 180, 2019, 917-923.
[18] Ding, Y., Osman, M.S., Wazwaz, A.M., Abundant complex wave solutions for the nonautonomous Fokas–Lenells equation in presence of perturbation terms, *Optik*, 181, 2019, 503-513.
[19] Ali, K.K., Osman, M.S., Baskonus, H.M., Elazabb, N.S., Ilhan, E., Analytical and numerical study of the HIV-1 infection of CD4+T-cells conformable fractional mathematical model that causes acquired immunodeficiency syndrome with the effect of antiviral drug therapy, *Mathematical Methods in the Applied Sciences*, 2020, DOI: https://doi.org/10.1002/mma.7022
[20] Kumar, D., Park, C., Tamanna, N., Paul, G.C., Osman, M.S., Dynamics of two-mode Sawada-Kotera equation: Mathematical and graphical analysis of its dual-wave solutions, *Results in Physics*, 19, 2020, 103581.
[21] Park, C., Nuruddeen, R.I., Ali, K.K., Muhammad, L., Osman, M.S., Baleanu, D., Novel hyperbolic and exponential ansatz methods to the fractional fifth-order Korteweg–de Vries equations, *Advances in Difference Equations*, 2020, 2020, 627.
[22] Osman, M.S., Inc, M., Liu, J.G., Hosseini. K., Yusuf, A., Different wave structures and stability analysis for the generalized (2+1)-dimensional Camassa–Holm–Kadomtsev–Petviashvili equation, *Physica Scripta*, 95(3), 2020, 035229.
[23] Ahmad, H., Khan, T.A., Stanimirović, P.S., Chu, Y.M., Ahmad, I., Modified Variational Iteration Algorithm-II: Convergence and Applications to Diffusion Models, *Complexity*, 2020, 2020, 8841718.
[24] Ahmad, H., Seadawy, A.R., Khan, T.A., Thounthong, P., Analytic approximate solutions for some nonlinear Parabolic dynamical wave equations, *Journal of Taibah University for Science*, 14(1), 2020, 346-358.
[25] Ahmad, H., Seadawy, A.R., Khan, T.A., Study on numerical solution of dispersive water wave phenomena by using a reliable modification of variational iteration algorithm, *Mathematics and Computers in Simulation*, 177, 2020, 13-23.
[26] Akgül, A., Ahmad, H., Reproducing kernel method for Fangzhu's oscillator for water collection from air, *Mathematical Methods in the Applied Sciences*, 2020, DOI: https://doi.org/10.1002/mma.6853.
[27] Ahmad, H., Khan, T.A., Ahmad, I., Stanimirović, P.S., Chu, Y.M., A new analyzing technique for nonlinear time fractional Cauchy reaction-diffusion model equations, *Results in Physics*, 19, 2020, 103462.
[28] Ahmad, H., Akgül, A., Khan, T.A., Stanimirović, P.S., Chu, Y.M., New Perspective on the Conventional Solutions of the Nonlinear Time-Fractional Partial Differential Equations, *Complexity*, 2020, 2020, 8829017.
[29] Alam, M.N., Tunc, C., New solitary wave structures to the (2+1)-dimensional KD and KP equations with spatio-temporal dispersion, *Journal of King Saud University-Science*, 32(8), 2020, 3400-3409.
[30] Alam, M.N., Exact solutions to the foam drainage equation by using the new generalized (G'/G)-expansion method, *Results in Physics*, 5, 2015, 168-177.
[31] Alam, M.N., Akbar, M.A., Mohyud-Din, S.T., A novel (G'/G)-expansion method and its application to the Boussinesq equation, *Chinese Physics B*, 23(2), 2014, 020203.
[32] Alam, M.N., Akbar, M.A., A new (G'/G)-expansion method and its application to the Burgers equation, *Walailak Journal of Science and Technology*, 11(8), 2014, 643-658.
[33] Bakheet Almatrafi, M., Ragaa Alharbi, A., Tunç, C., Constructions of the soliton solutions to the good Boussinesq equation, *Advances in Difference Equations*, 629, 2020, 1-14.
[34] Nur Alam, Md., Tunç, C., Constructions of the optical solitons and others soliton to the conformable fractional Zakharov-Kuznetsov equation with power law nonlinearity, *Journal of Taibah University for Science,* 14, 2020, 94–100.
[35] Shahid, N., Md., Tunç, C., Resolution of coincident factors in altering the flow dynamics of an MHD elastoviscous fluid past an unbounded upright channel, *Journal of Taibah University for Science,* 13, 2019, 1022-1034.
[36] Bardin, B.S., Chekina, E.A., On the constructive algorithm for stability analysis of an equilibrium point of aperiodic hamiltonian system with two degrees of freedom in the case of combinational resonance, *Regular and Chaotic Dynamics*, 24(2), 2019, 127-144.
[37] Augner, B., Well-posedness and stability of infinite dimensional linear port-Hamiltonian systems with nonlinear boundary feedback, *SIAM J. Control Optim.*, 5 (3), 2019, 1818-1844.
[38] Deffo, G.R., Yamgoue, S.B., Pelap, F.B., Modulational instability and peak solitary wave in adiscrete nonlinear electrical transmission line described by the modified extended nonlinear Schrodinger equation, *The European Physical Journal B*, 91(10), 2018, 242.
[39] Guy, T.T., Bogning, J.R., Construction of Breather soliton solutions of a modeled equation in a discrete nonlinear electrical line and the survey of modulationnal instability, *Journal of Physics Communications*, 2(11), 2018, 115007.
[40] Motcheyo, A.B.T., Tchawoua, C., Tchameu, J.D.T., Supra transmission induced by waves collisions in a discrete electrical lattice, *Physical Review E*, 88(4), 2013, 040901.
[41] Zhou, X., Shan, W., Niu, Z., Xiao, P., Wang, Y., Lie symmetry analysis and some exact solutions for modified Zakharov-Kuznetsov equation, *Modern Physics Letters B*, 32(31), 2018, 1850383.
[42] F. Linares, F., Ponce, G., On special regularity properties of solutions of the Zakharov-Kuznetsov equation, *Communications on Pure & Applied Analysis*, 17(4), 2018, 1561-1572.
[43] Das, A., Explicit weierstrass traveling wave solutions and bifurcation analysis for dissipative Zakharov-Kuznetsov modified equal width equation,

Computational and Applied Mathematics, 37(3), 2018, 3208-3225.

ORCID iD

Shariful Islam https://orcid.org/0000-0002-8236-7505
Md. Nur Alam https://orcid.org/0000-0001-6815-678X
Md. Fayz-Al-Asad https://orcid.org/0000-0002-1240-4761
Cemil Tunç https://orcid.org/0000-0003-2909-8753

How to cite this article: Islam S., Nur Alam Md., Fayz-Al-Asad Md., Tunç S. An analytical Technique for Solving New Computational Solutions of the Modified Zakharov-Kuznetsov Equation Arising in Electrical Engineering, *J. Appl. Comput. Mech.*, 7(2), 2021, 715–726. https://doi.org/10.22055/JACM.2020.35571.2687